3G/LTE Antenna

MODEL: TH-88BL

1.1 Electrical Properties

Parameter	Description
Frequency Band	698~960/1710~2700MHz
Nominal Impedance	50 ohm
Polarization	Vertical
Electrical Wave	Dipole
Return Loss	Please See Data
V.S.W.R	6.5:1
Antenna Average Gain	0-4dBi
Note: Gain includes the cable loss	

1.2 Mechanical Properties

Parameter	Description
Antenna Type	External Antenna
Antenna Cover	ABS or ASA
Touch Type	Screw Type 5/8-24 UNEF
Connector Type	N(F)
Antenna Dimensions	OD25x77.6 mm±0.5
Antenna Color	Black
Operating Temperature Range	-40˚C~+80˚C
Storage Temperature Range	-40˚C~+80˚C
Waterproof	IPX7

2. APPEARANCE

NO.	NAME	FINISH	Q, TY
01	TUBE ABS or ASA	Black	01
02	O-RING	Black or Orange	01
03	N 180°(F)	Nickel plating	01

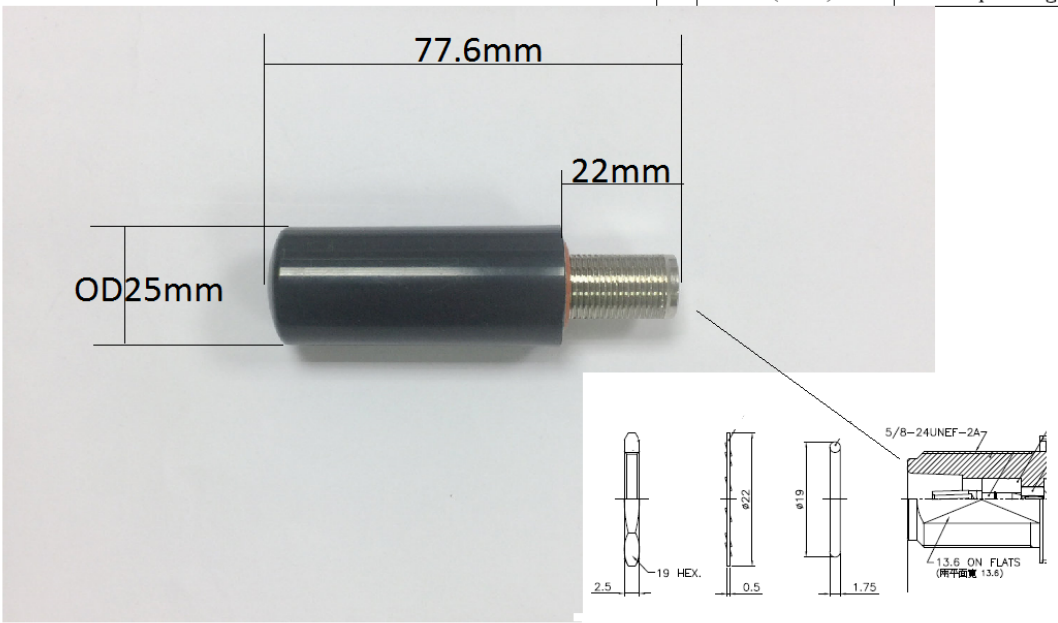

Third angle projection	CUSTOMER' S	MODEL	PARTS NUMBER	FREQUENCY	UNIT	SCALE	DATE	VERSION
		TH-88BL		3G/LTE	M/M		20180205	1
	TOLERANCE	X. XX±0. 15	NAME	PARTS NUMBER	APPROVED	CHECKED	DRAWING	DESIGNED
	SURFACE ROUGHNESS	S	APPEARANCE					

L-Mounting : FB7

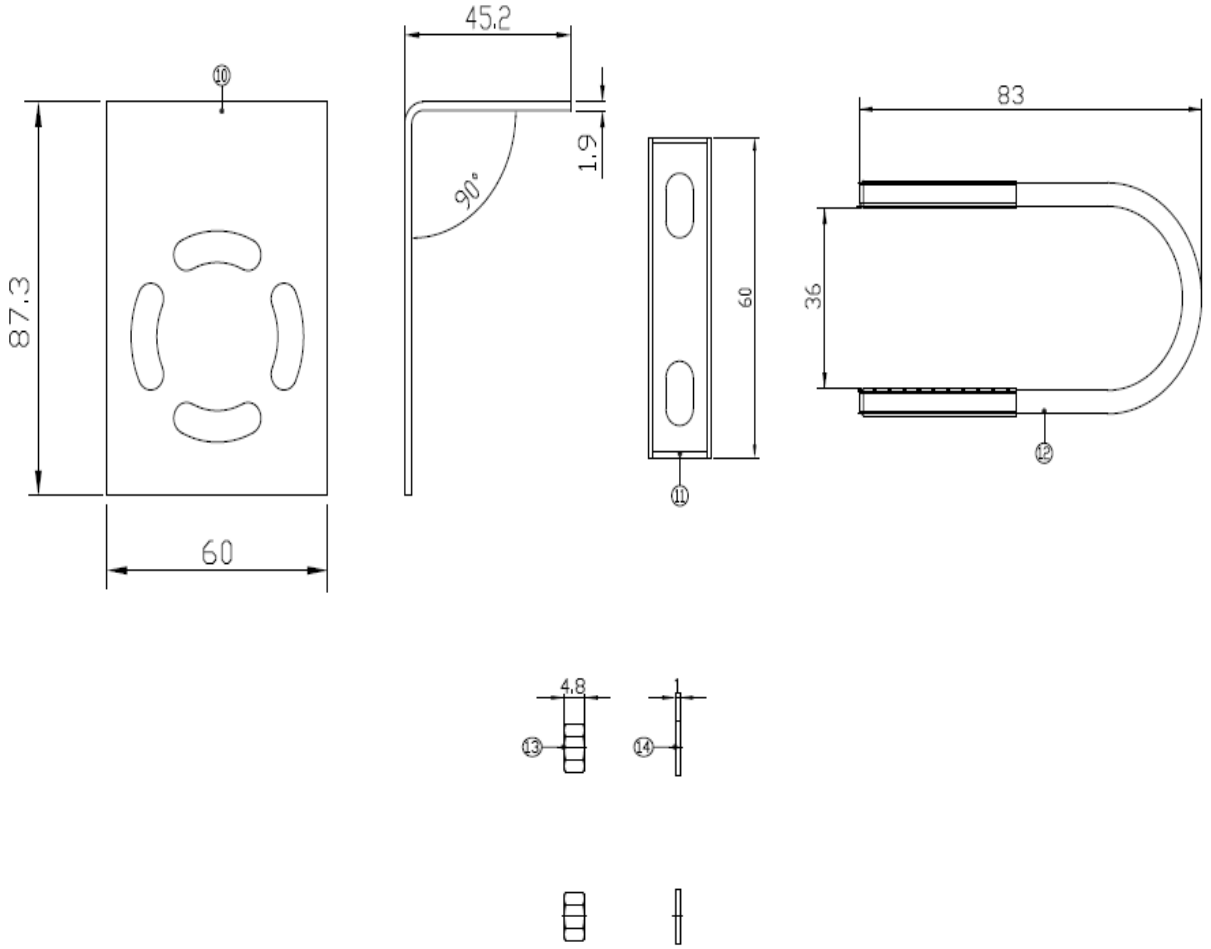
45.2
1.9
90°
87.3
60
60
83
36
4.8
1

3.FREQUENCY

ADVANTEST R3767BH NETWORK ANALYZER
MARKER 4
1.71GHz
1.312
29.461
ACTIVE CHANNEL
CH1
CH2
ENTRY
RESPONSE
STIMULUS
INSTRUMENT STATE
GP-IB
RUN
LCL

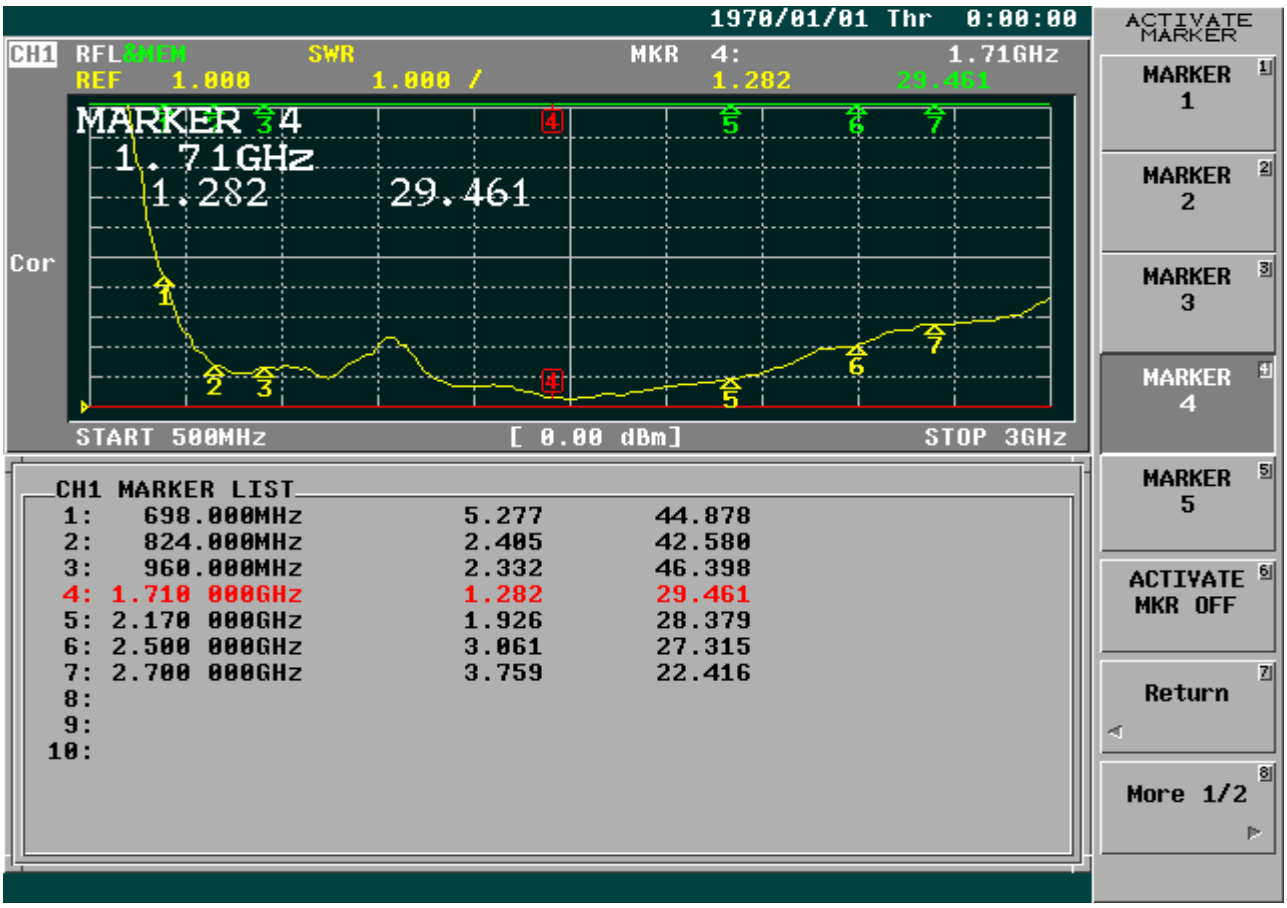
1970/01/01 Thr 0:00:00
CH1 RFL&MEM SWR MKR 4: 1.71GHz
REF 1.000 1.000 / 1.282 29.461
MARKER 4
1.71GHz
1.282 29.461
Cor
START 500MHz [0.00 dBm] STOP 3GHz
CH1 MARKER LIST
1: 698.000MHz 5.277 44.878
2: 824.000MHz 2.405 42.580
3: 960.000MHz 2.332 46.398
4: 1.710 000GHz 1.282 29.461
5: 2.170 000GHz 1.926 28.379
6: 2.500 000GHz 3.061 27.315
7: 2.700 000GHz 3.759 22.416
8:
9:
10:
ACTIVATE MARKER
MARKER 1
MARKER 2
MARKER 3
MARKER 4
MARKER 5
ACTIVATE MKR OFF
Return
More 1/2

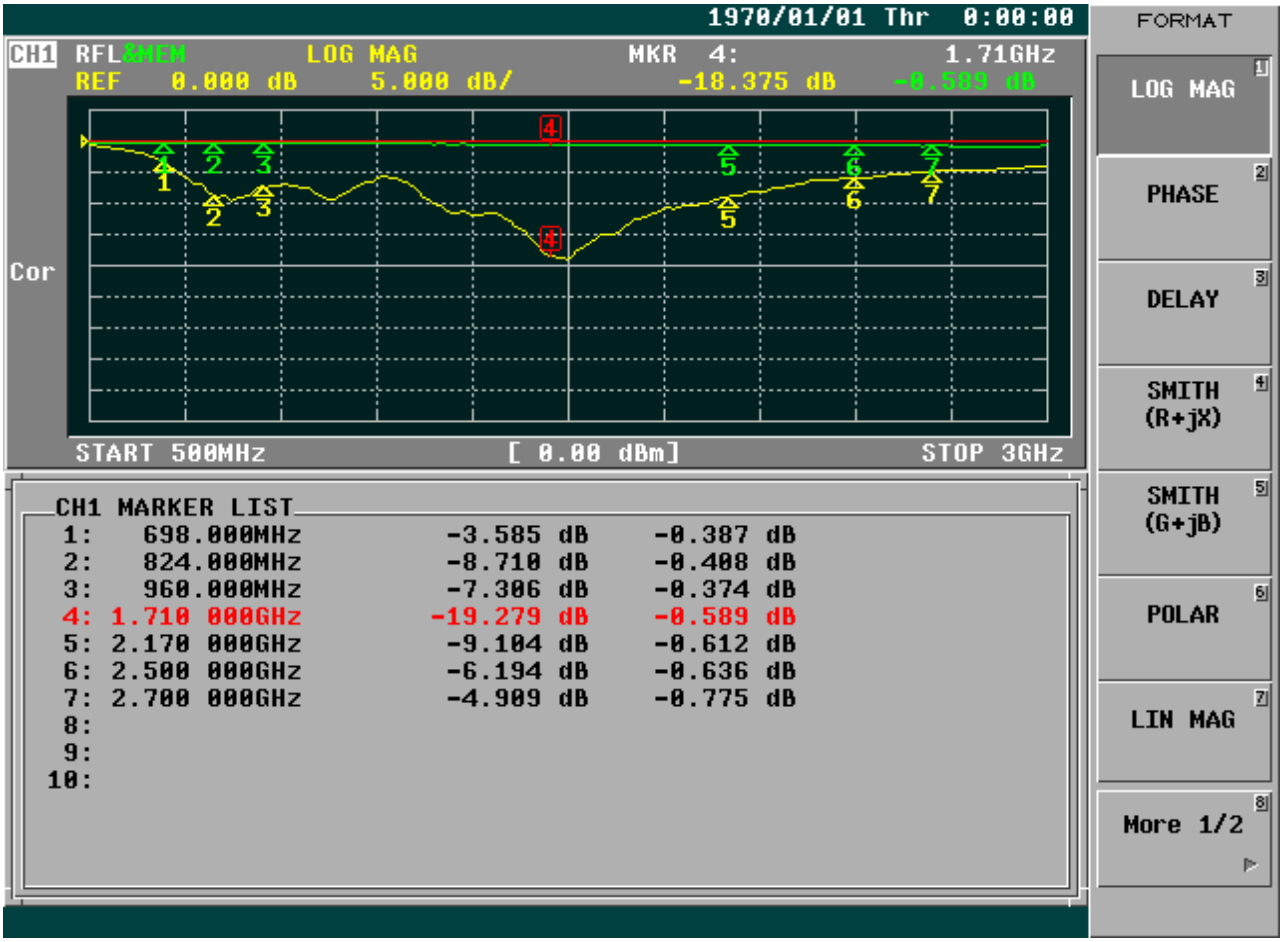
1970/01/01 Thr 0:00:00
CH1 RFL&MEM LOG MAG MKR 4: 1.71GHz
REF 0.000 dB 5.000 dB/ -18.375 dB -0.589 dB
Cor
START 500MHz [0.00 dBm] STOP 3GHz
CH1 MARKER LIST
1: 698.000MHz -3.585 dB -0.387 dB
2: 824.000MHz -8.710 dB -0.408 dB
3: 960.000MHz -7.306 dB -0.374 dB
4: 1.710 000GHz -19.279 dB -0.589 dB
5: 2.170 000GHz -9.104 dB -0.612 dB
6: 2.500 000GHz -6.194 dB -0.636 dB
7: 2.700 000GHz -4.909 dB -0.775 dB
8:
9:
10:
FORMAT
LOG MAG
PHASE
DELAY
SMITH (R+jX)
SMITH (G+jB)
POLAR
LIN MAG
More 1/2

1970/01/01 Thr 0:00:00
CH1 RFL&MEM SMITH(R+jX) MKR 4: 1.71GHz
FS 1.000 60.185 Ω -1.179 Ω
Cor
START 500MHz [0.00 dBm] STOP 3GHz
CH1 MARKER LIST
1: 698.000MHz 18.245 Ω 46.779 Ω 10.666nH
2: 824.000MHz 70.575 Ω 40.700 Ω 7.861nH
3: 960.000MHz 118.009 Ω 25.779 Ω 4.273nH
4: 1.710 000GHz 61.484 Ω -1.217 Ω 76.432pF
5: 2.170 000GHz 67.037 Ω 36.529 Ω 2.679nH
6: 2.500 000GHz 35.287 Ω -47.394 Ω 1.343pF
7: 2.700 000GHz 13.603 Ω -11.255 Ω 5.237pF
8:
9:
10:
FORMAT
LOG MAG
PHASE
DELAY
SMITH (R+jX)
SMITH (G+jB)
POLAR
LIN MAG
More 1/2

Frequency (MHz)	**690**	**698**	**704**	**710**	**716**	**734**	**740**	**746**	**751**	**756**	**777**	**782**	**787**	**791**
Peak Gain (dBi)	-0.64	-0.36	-0.20	-0.13	-0.18	0.52	0.95	1.28	1.58	1.84	2.36	2.37	2.39	2.42
Efficiency (%)	39.18	40.49	40.91	41.62	41.12	44.26	46.05	47.84	49.36	51.16	57.04	57.46	58.08	58.62
Frequency (MHz)	**806**	**815**	**821**	**824**	**830**	**832**	**836**	**845**	**847**	**849**	**860**	**862**	**869**	**875**
Peak Gain (dBi)	2.70	2.72	2.80	2.90	2.94	2.98	3.02	2.95	2.89	2.84	2.61	2.57	2.52	2.47
Efficiency (%)	69.57	69.17	68.74	68.83	67.86	67.67	67.24	66.65	66.39	66.08	64.12	63.69	61.78	60.42
Frequency (MHz)	**880**	**881**	**890**	**894**	**900**	**915**	**925**	**940**	**960**	**1710**	**1750**	**1755**	**1785**	**1805**
Peak Gain (dBi)	2.42	2.40	2.46	2.45	2.48	2.58	2.60	2.75	3.08	4.66	4.45	4.47	4.20	4.08
Efficiency (%)	59.19	58.88	57.78	57.40	56.71	58.00	59.08	60.69	60.98	90.06	89.27	88.63	85.90	86.21
Frequency (MHz)	**1840**	**1850**	**1880**	**1882**	**1910**	**1920**	**1930**	**1950**	**1962**	**1980**	**1990**	**2110**	**2132**	**2140**
Peak Gain (dBi)	4.18	4.22	4.10	4.05	3.90	3.89	3.97	4.28	4.45	4.54	4.52	3.33	3.31	3.14
Efficiency (%)	89.38	90.44	96.15	95.94	92.63	90.83	92.76	97.55	90.60	92.12	92.79	91.33	89.08	87.16

Frequency (MHz)	2155	2170	2305	2345	2390	2500	2535	2570	2620	2655	2690			
Peak Gain (dBi)	3.12	3.29	3.41	3.15	3.37	4.03	4.12	4.30	3.96	3.50	3.54			
Efficiency (%)	87.00	88.46	88.05	83.89	81.04	85.00	86.66	86.67	85.24	83.45	82.30			

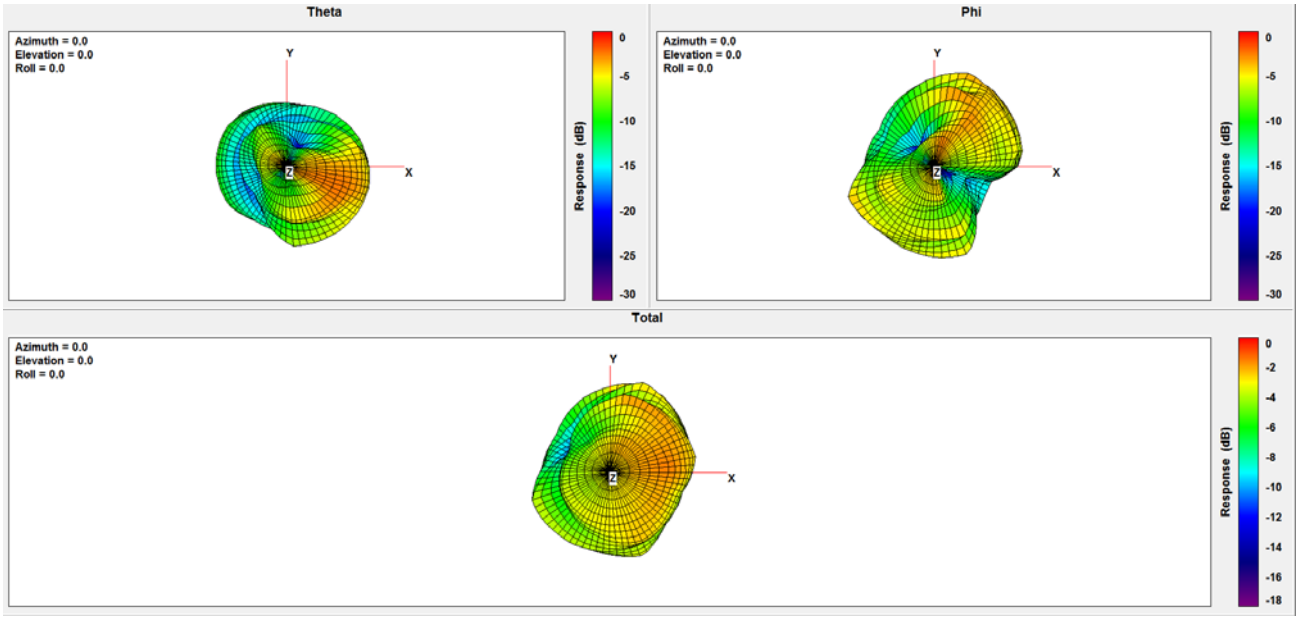

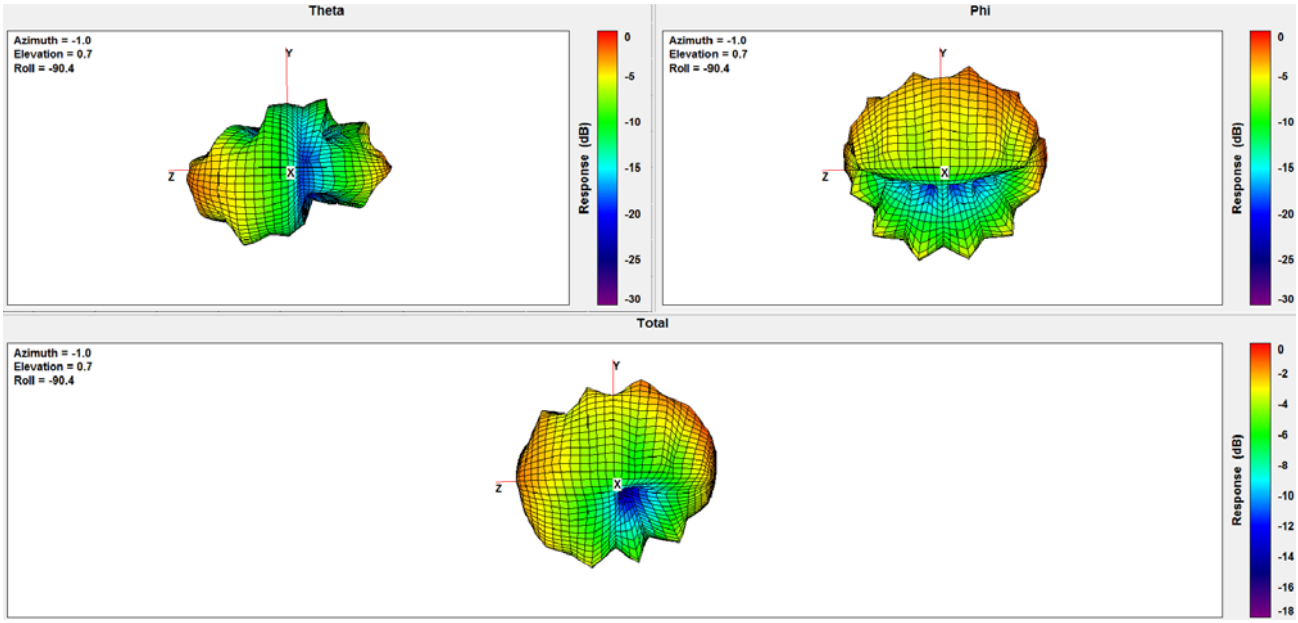

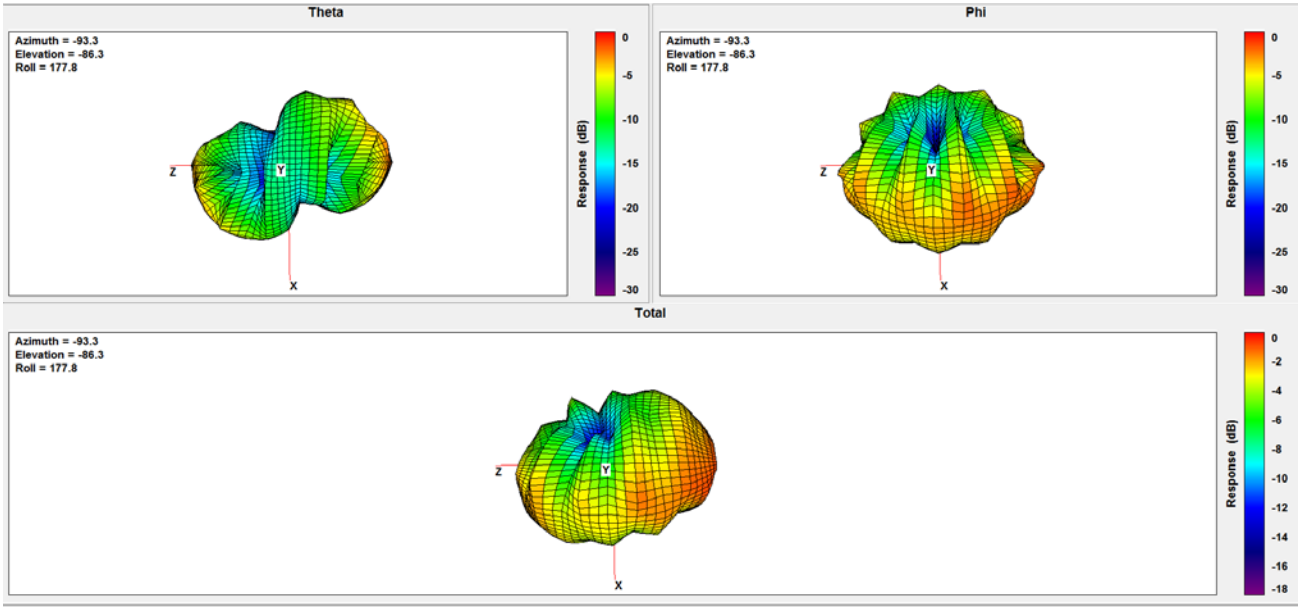
Theta
Azimuth = -93.3
Elevation = -86.3
Roll = 177.8
Phi
Azimuth = -93.3
Elevation = -86.3
Roll = 177.8
Total
Azimuth = -93.3
Elevation = -86.3
Roll = 177.8
Response (dB)

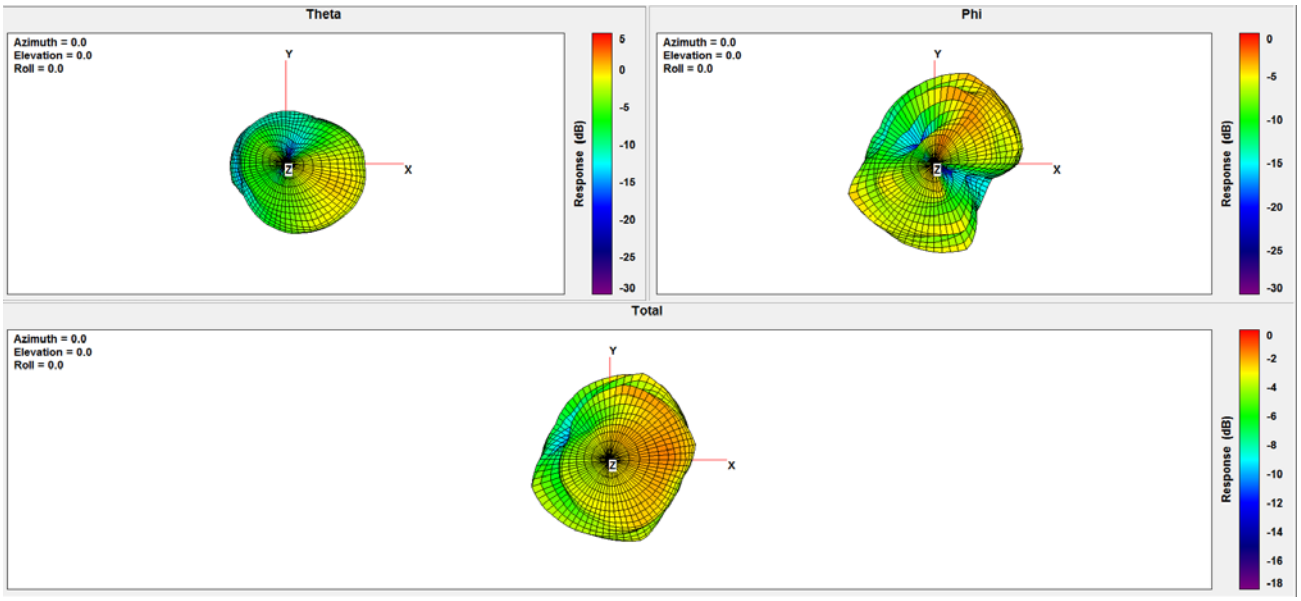
Theta
Azimuth = 0.0
Elevation = 0.0
Roll = 0.0
Phi
Azimuth = 0.0
Elevation = 0.0
Roll = 0.0
Total
Azimuth = 0.0
Elevation = 0.0
Roll = 0.0
Response (dB)

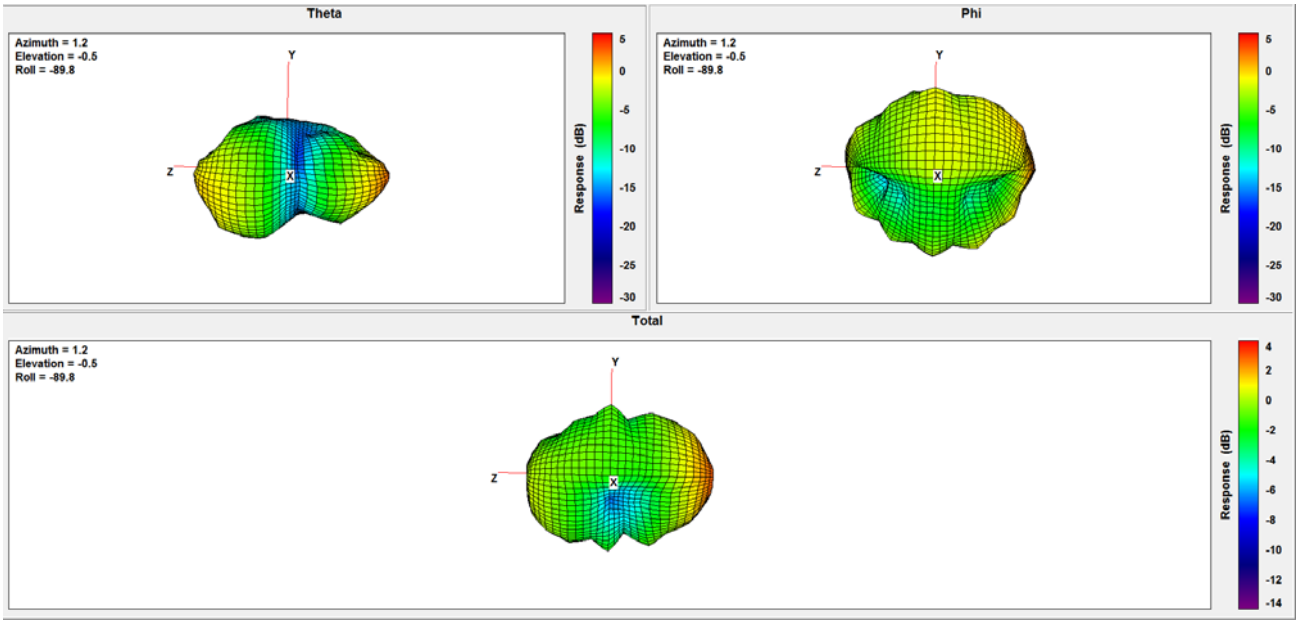
Theta
Azimuth = 1.2
Elevation = -0.5
Roll = -89.8
Phi
Azimuth = 1.2
Elevation = -0.5
Roll = -89.8
Total
Azimuth = 1.2
Elevation = -0.5
Roll = -89.8
Response (dB)

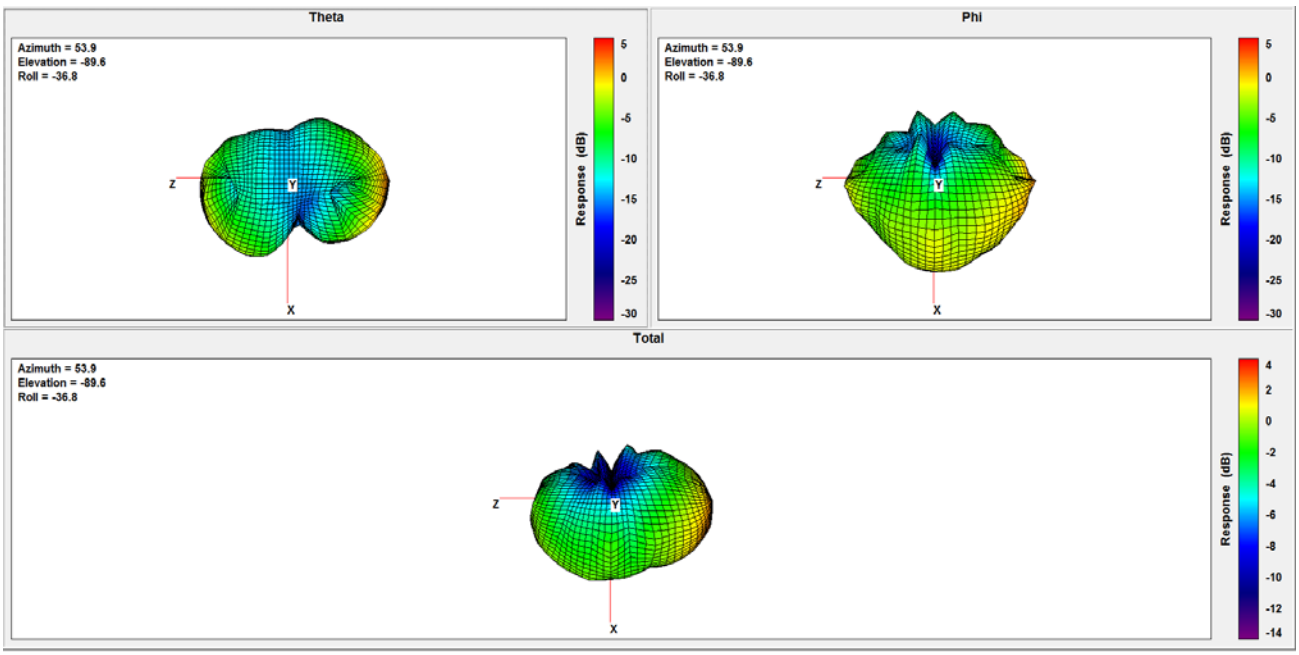
Theta
Azimuth = 53.9
Elevation = -89.6
Roll = -36.8
Z
Y
X
Response (dB)
5
0
-5
-10
-15
-20
-25
-30
Phi
Azimuth = 53.9
Elevation = -89.6
Roll = -36.8
Z
Y
X
Response (dB)
5
0
-5
-10
-15
-20
-25
-30
Total
Azimuth = 53.9
Elevation = -89.6
Roll = -36.8
Z
Y
X
Response (dB)
4
2
0
-2
-4
-6
-8
-10
-12
-14