4G/LTE Antenna

Model : TH-89C

1. GENERAL DESCRIPTION

P/N
TH-89C-150mm-IPEX

1.1 Electrical Properties

Parameter	Description
Frequency Band	690~960/1710~2170/2400~2700MHz
Nominal Impedance	50 ohm
Polarization	Vertical
V.S.W.R	2.5：1

1.2 Mechanical Properties

Parameter	Description
Antenna Type	External Antenna
Touch Type	Screw Type
Cable & Connector Type	150mm-IPEX
Antenna Dimensions	22.3 x 156.6mm±1.5
Antenna Color	Black
Operating Temperature Range	-20˚C~+60˚C
Storage Temperature Range	-30˚C~+70˚C

2. APPEARANCE:

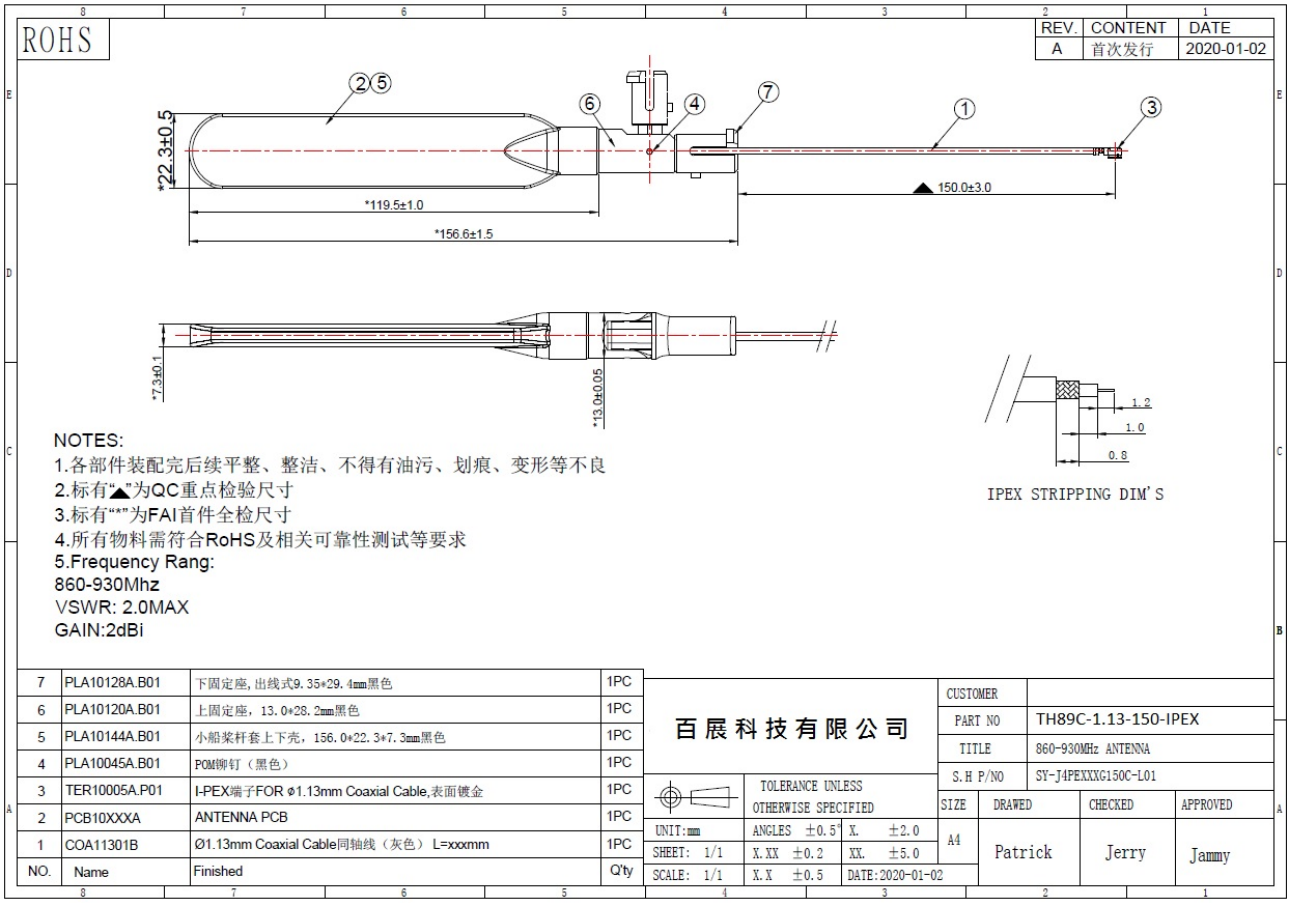

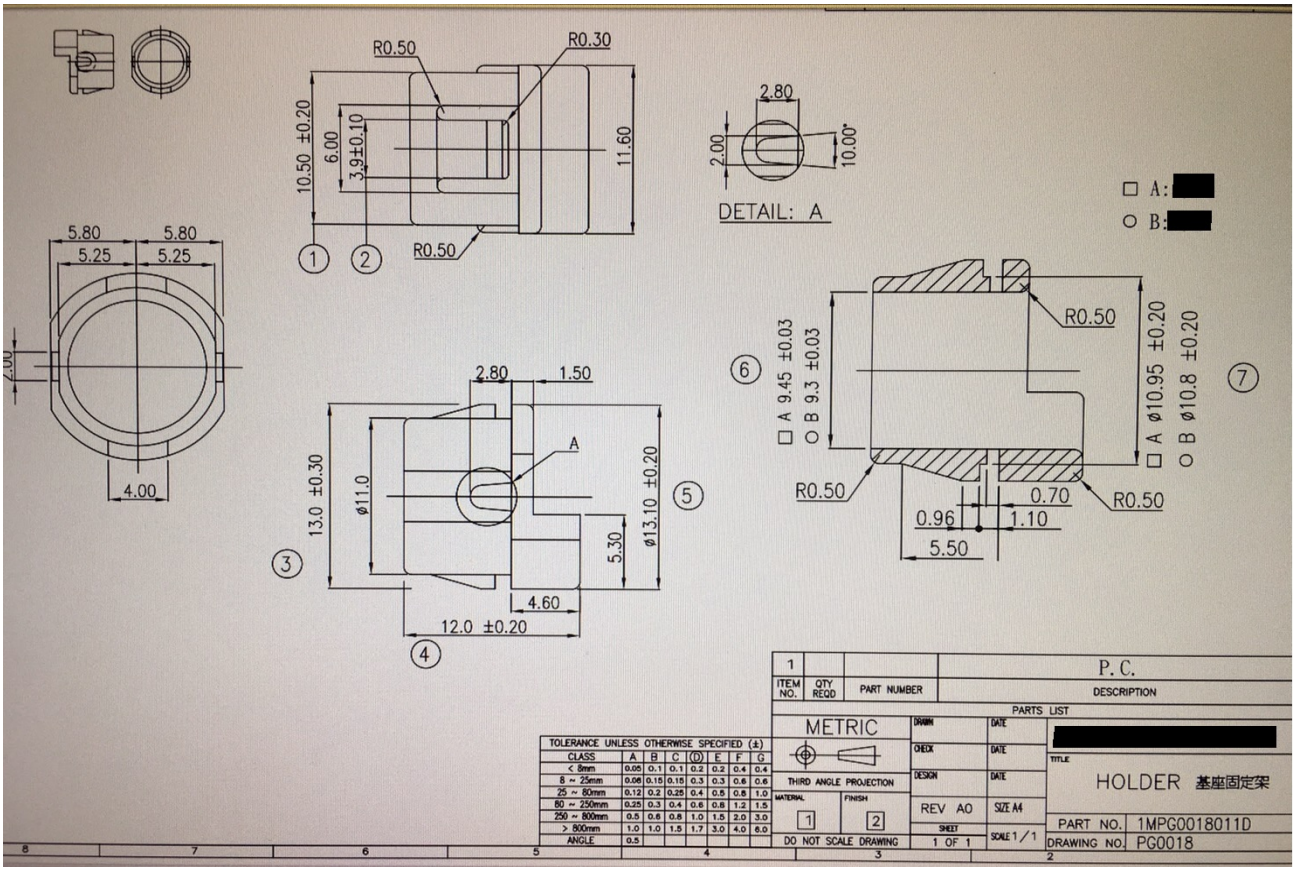

3. Return Loss, V.S.W.R. and Smith Chart

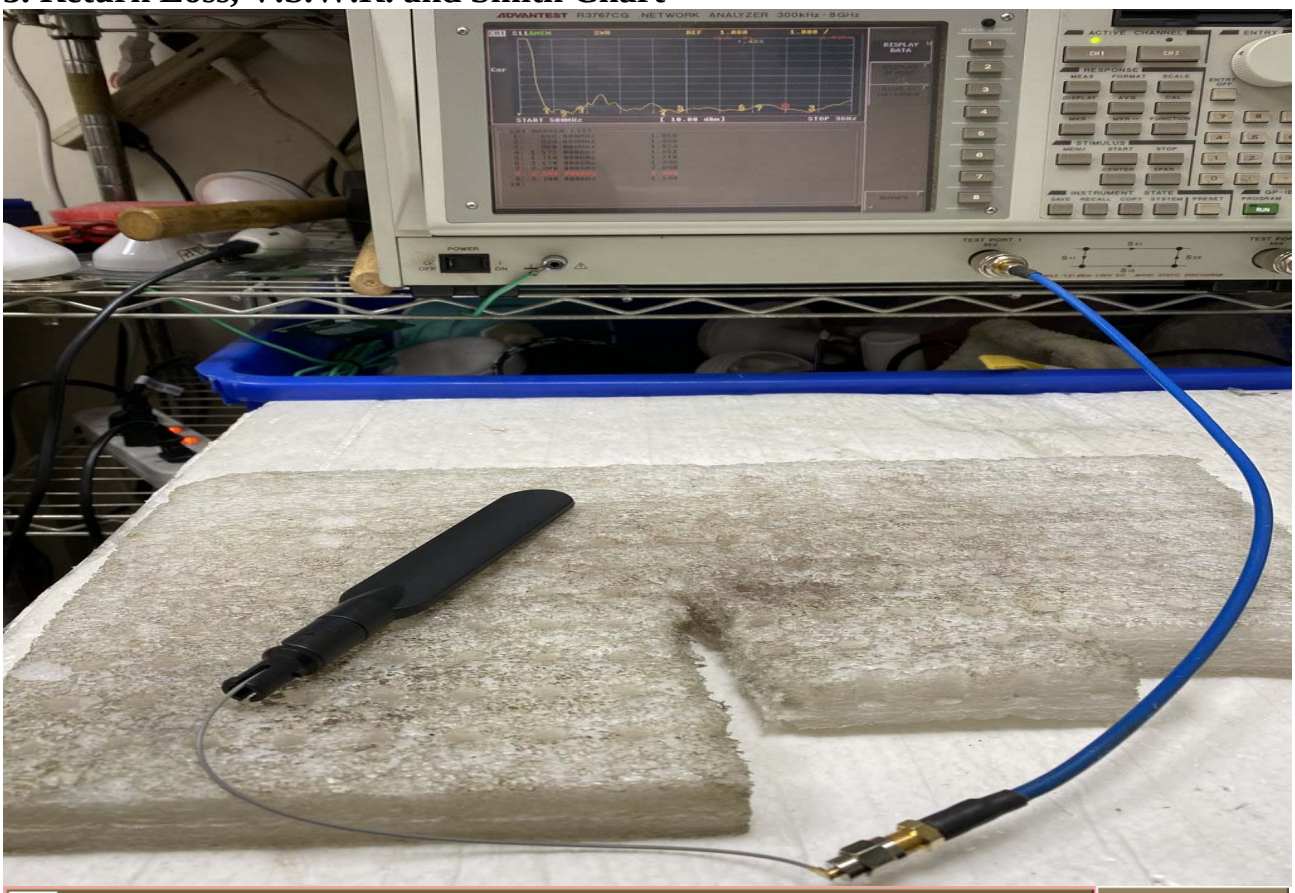

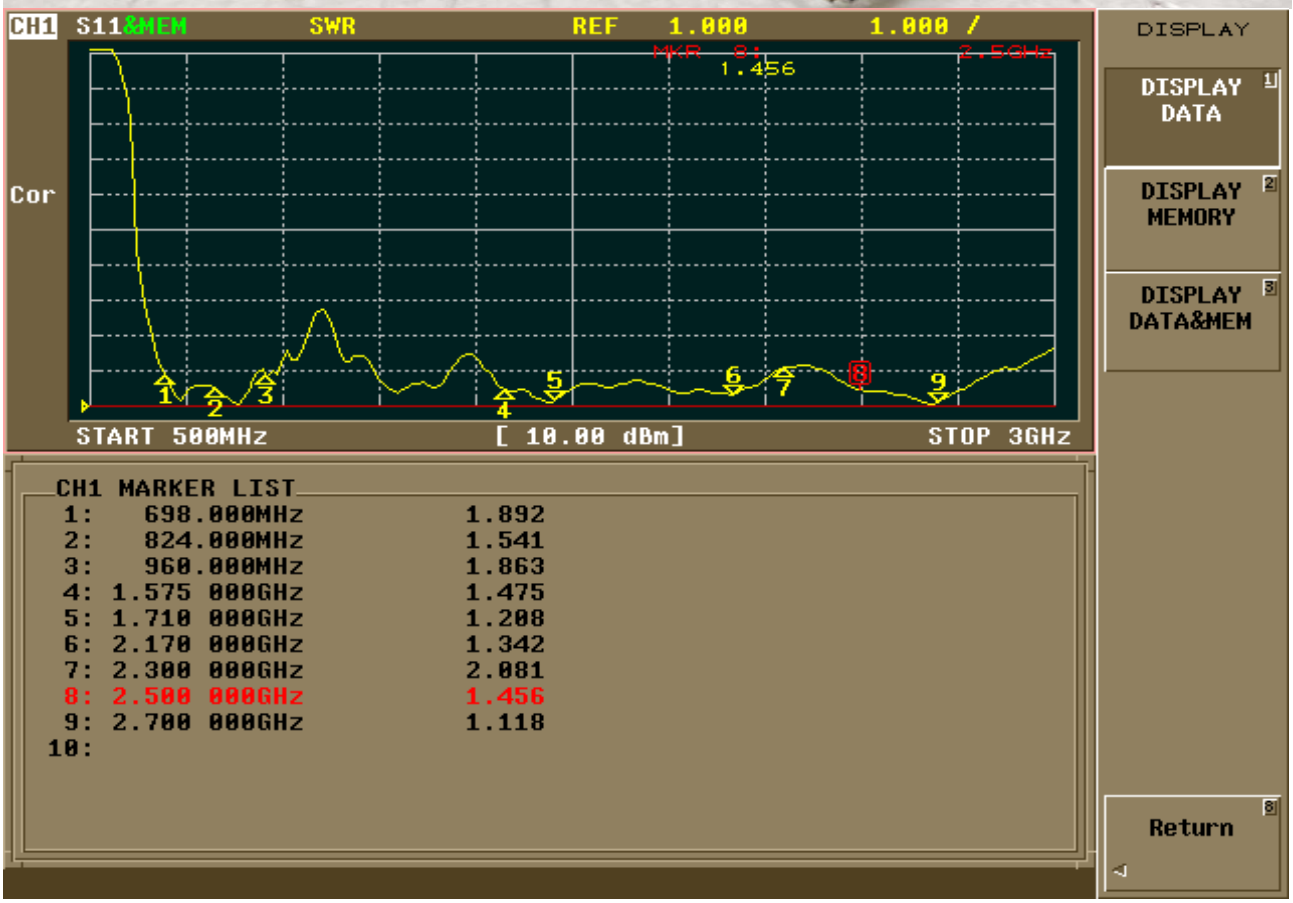

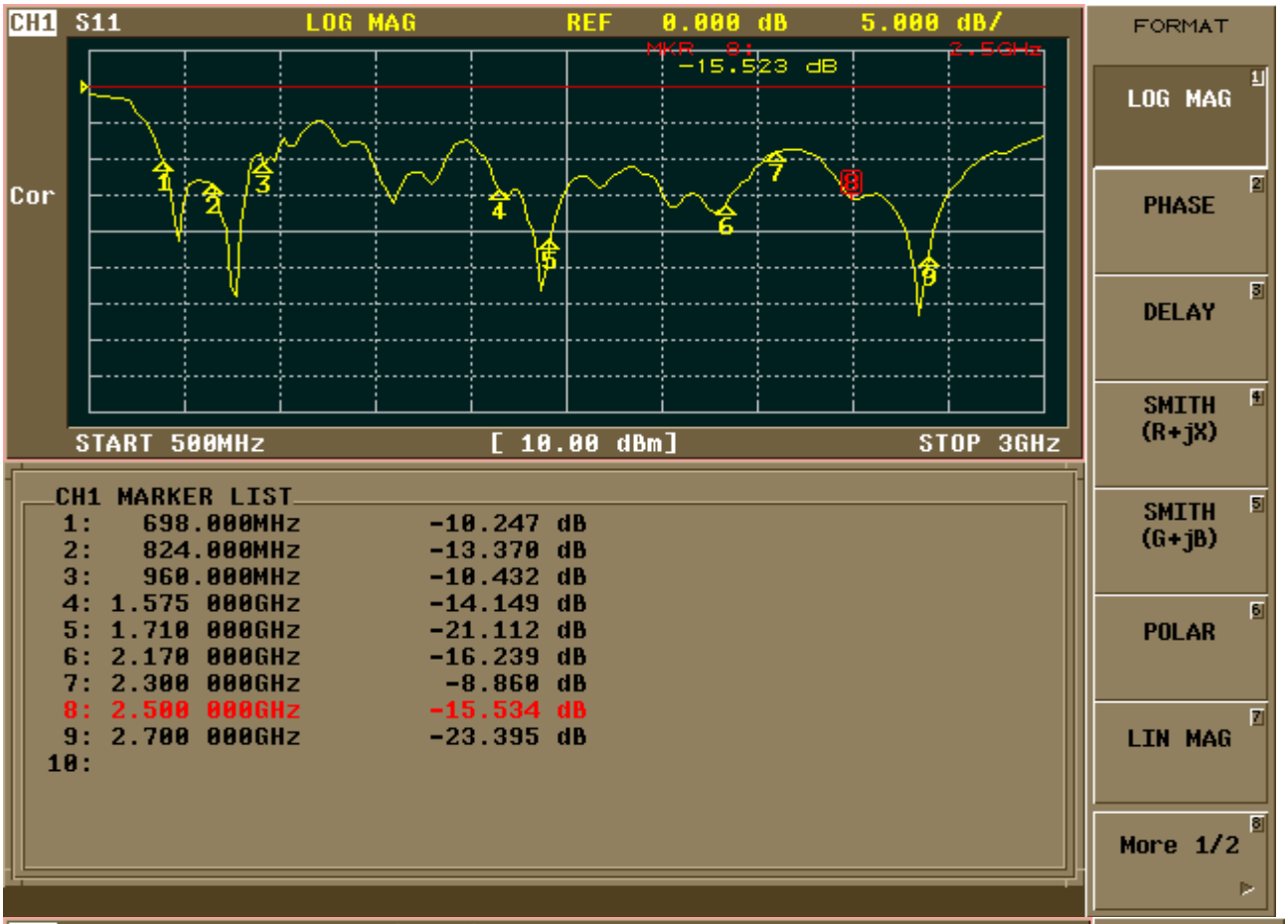

CH1 MARKER LIST

1:	698.000MHz	-10.247 dB
2:	824.000MHz	-13.370 dB
3:	960.000MHz	-10.432 dB
4:	1.575 000GHz	-14.149 dB
5:	1.710 000GHz	-21.112 dB
6:	2.170 000GHz	-16.239 dB
7:	2.300 000GHz	-8.860 dB
8:	2.500 000GHz	-15.534 dB
9:	2.700 000GHz	-23.395 dB
10:		

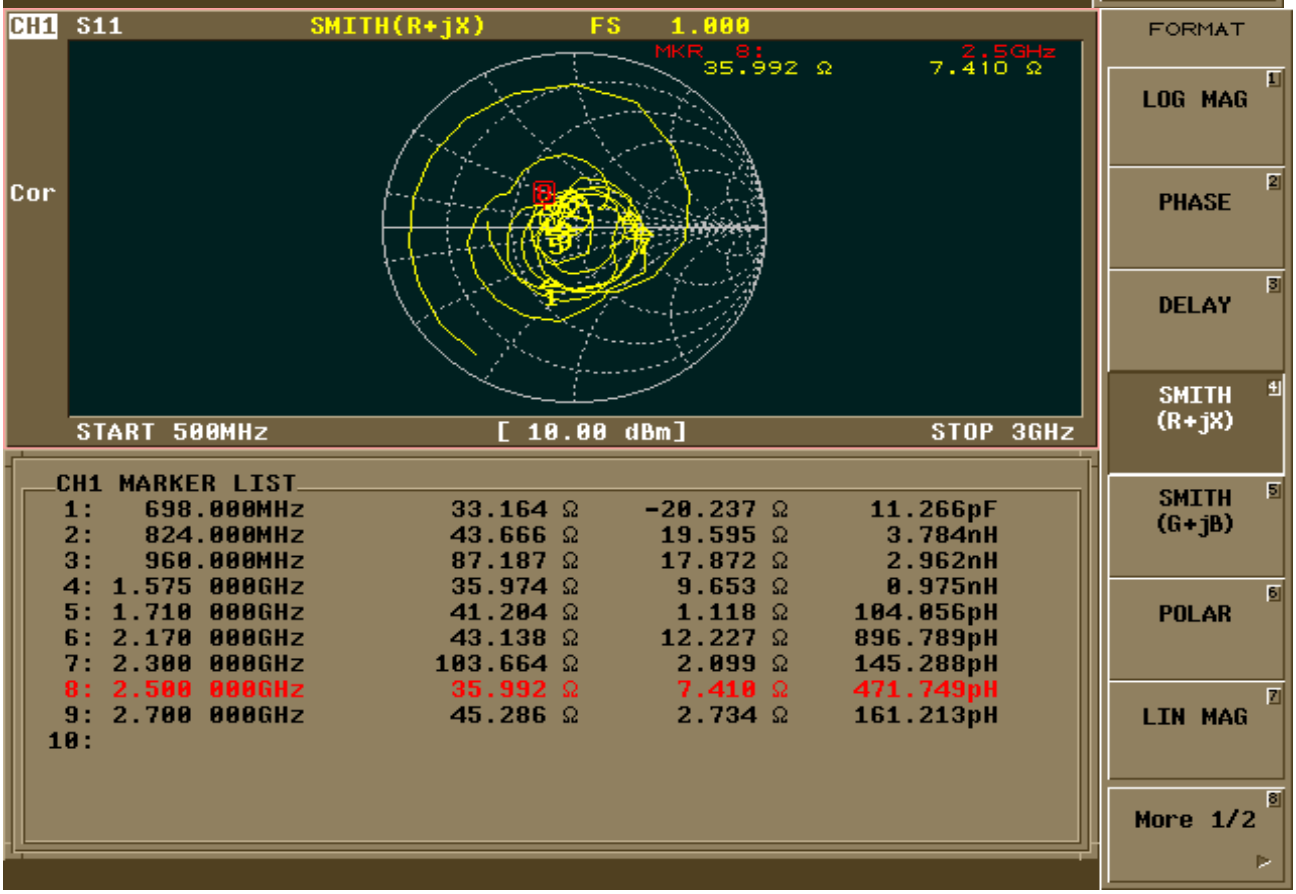

CH1 MARKER LIST

1:	698.000MHz	33.164 Ω	-20.237 Ω	11.266pF
2:	824.000MHz	43.666 Ω	19.595 Ω	3.784nH
3:	960.000MHz	87.187 Ω	17.872 Ω	2.962nH
4:	1.575 000GHz	35.974 Ω	9.653 Ω	0.975nH
5:	1.710 000GHz	41.204 Ω	1.118 Ω	104.056pH
6:	2.170 000GHz	43.138 Ω	12.227 Ω	896.789pH
7:	2.300 000GHz	103.664 Ω	2.099 Ω	145.288pH
8:	2.500 000GHz	35.992 Ω	7.410 Ω	471.749pH
9:	2.700 000GHz	45.286 Ω	2.734 Ω	161.213pH
10:				

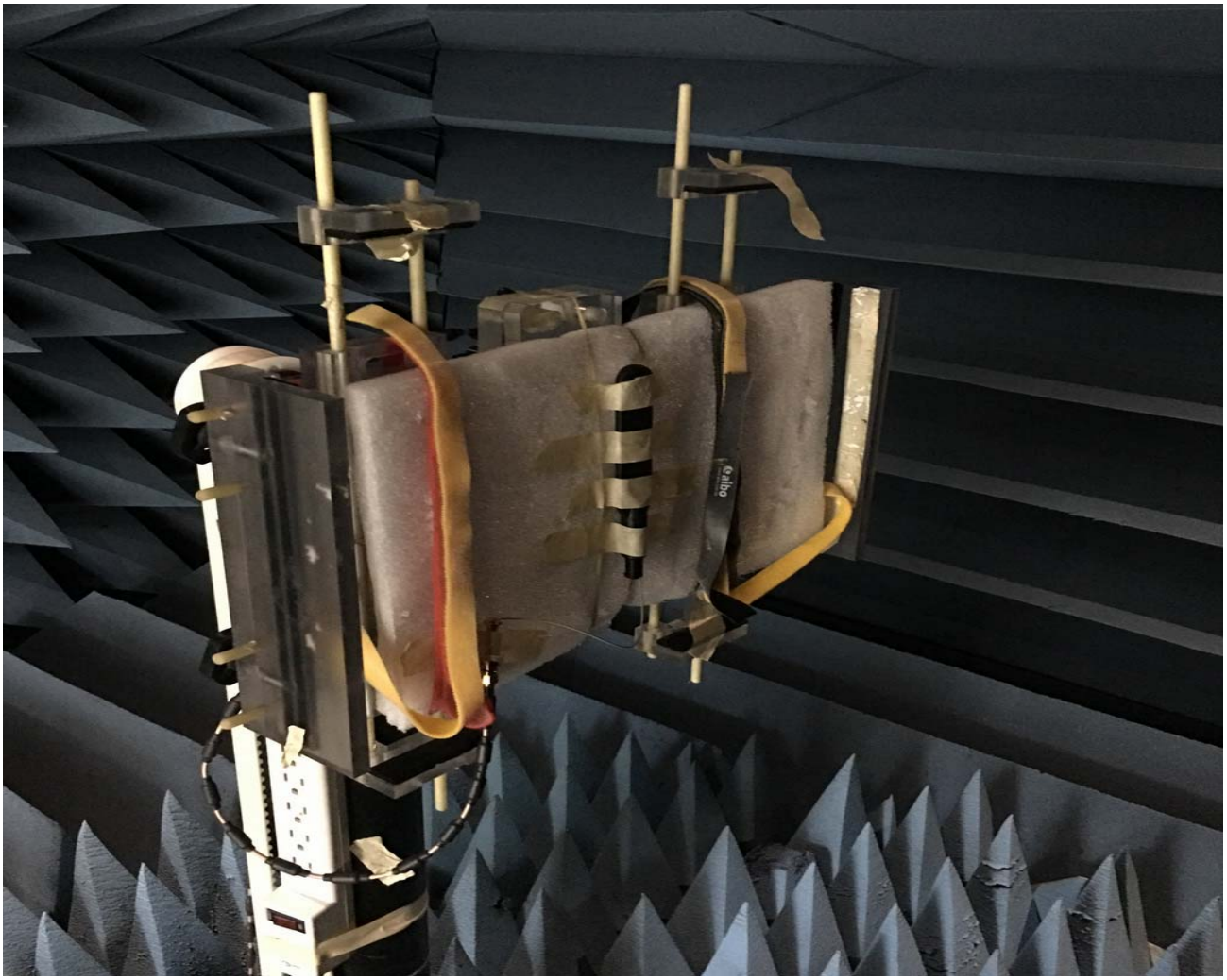

Frequency (MHz)	698	704	710	716	720	725	730	734	740	746	756	765
Peak Gain (dBi)	0.57	0.87	1.06	1.13	1.21	1.26	1.28	1.29	1.31	1.30	1.38	1.32
Efficiency (%)	44.13	46.39	47.12	46.92	46.39	45.39	44.49	43.83	42.95	41.82	42.59	42.64
Frequency (MHz)	**772**	**777**	**782**	**787**	**791**	**806**	**821**	**824**	**836**	**849**	**860**	**868**
Peak Gain (dBi)	1.23	1.12	1.07	0.91	0.86	0.59	0.81	0.86	1.12	1.45	1.52	1.39
Efficiency (%)	42.39	41.76	42.13	42.15	42.10	40.86	41.80	42.26	43.54	45.58	45.47	44.28

Frequency (MHz)	880	894	902	915	930	940	960	1425	1440	1455	1470	1485
Peak Gain (dBi)	1.31	0.95	0.73	0.90	0.79	0.76	0.46	1.41	1.39	1.33	1.09	0.97
Efficiency (%)	43.63	41.40	39.41	39.86	37.66	37.68	35.09	36.88	36.23	35.20	33.68	33.04
Frequency (MHz)	**1500**	**1515**	**1560**	**1565**	**1575**	**1602**	**1616**	**1620**	**1626**	**1710**	**1730**	**1750**
Peak Gain (dBi)	0.69	0.77	1.19	1.23	1.33	1.80	1.89	1.86	1.82	2.12	2.00	1.93
Efficiency (%)	33.13	33.88	38.64	39.44	40.81	46.41	47.98	47.90	47.96	48.18	47.96	48.30
Frequency (MHz)	**1770**	**1785**	**1805**	**1840**	**1850**	**1880**	**1910**	**1920**	**1930**	**1950**	**1960**	**1980**
Peak Gain (dBi)	2.15	2.27	2.29	2.31	2.49	3.18	3.28	3.17	3.12	2.93	2.80	2.93
Efficiency (%)	49.48	50.31	51.97	52.39	53.20	58.07	60.77	60.95	62.50	64.62	64.09	63.45
Frequency (MHz)	**1995**	**2110**	**2140**	**2170**	**2300**	**2325**	**2350**	**2375**	**2400**	**2500**	**2515**	**2535**
Peak Gain (dBi)	3.11	2.48	2.25	2.58	2.78	3.25	3.21	3.04	2.91	3.13	3.07	2.82
Efficiency (%)	63.75	55.16	52.20	52.48	56.54	57.73	54.35	50.59	49.17	48.80	49.77	51.68
Frequency (MHz)	**2555**	**2570**	**2595**	**2620**	**2630**	**2655**	**2680**	**2690**				
Peak Gain (dBi)	2.67	2.33	2.03	1.88	1.82	1.52	1.21	0.96				
Efficiency (%)	2555	2570	2595	2620	2630	2655	2680	2690				

698Mhz:

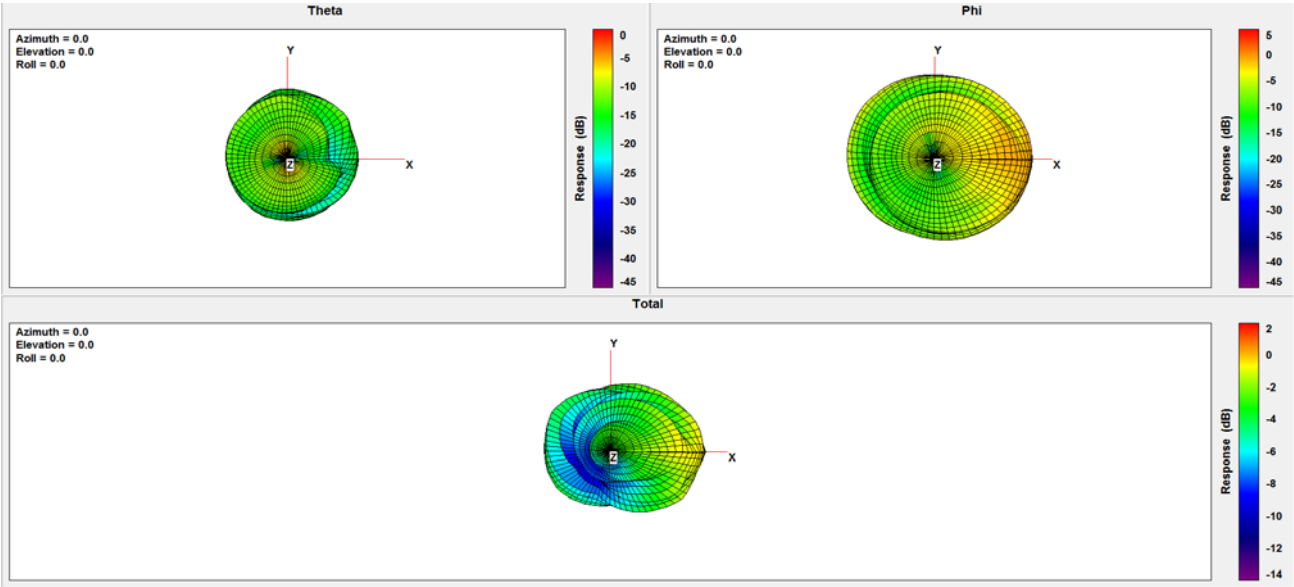

756Mhz:

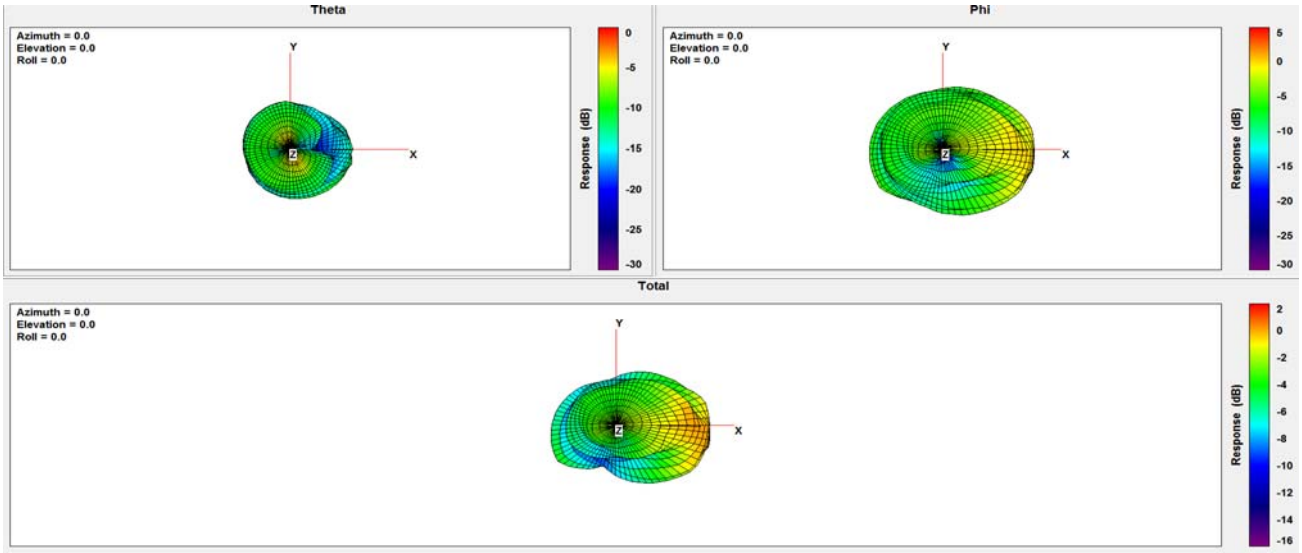

824Mhz:

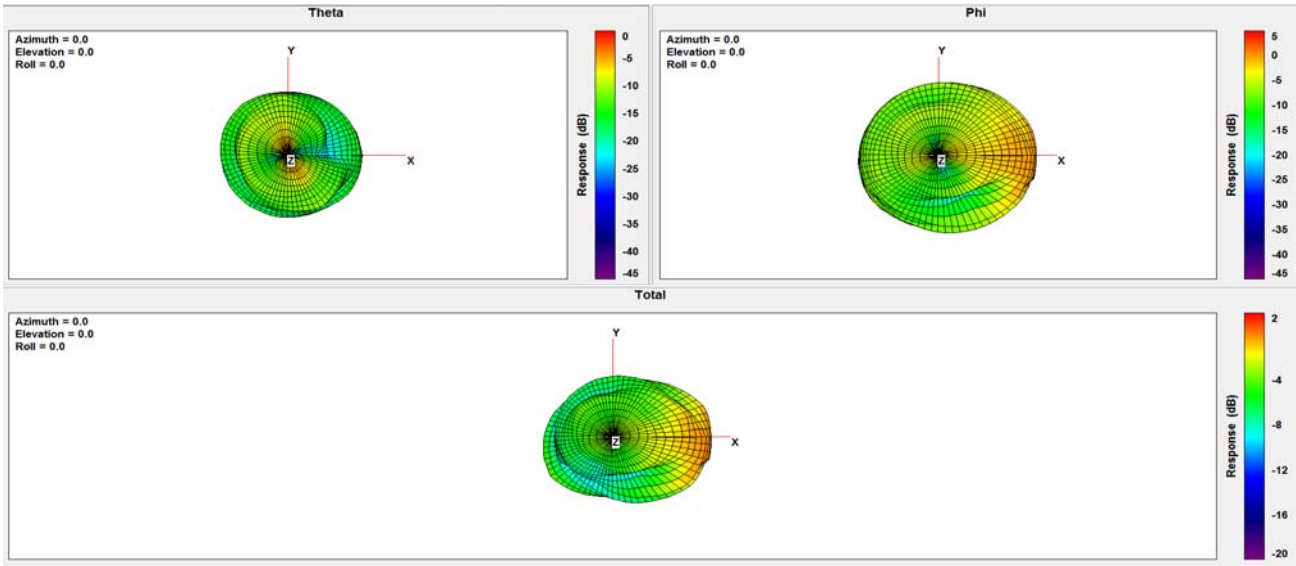

915Mhz:

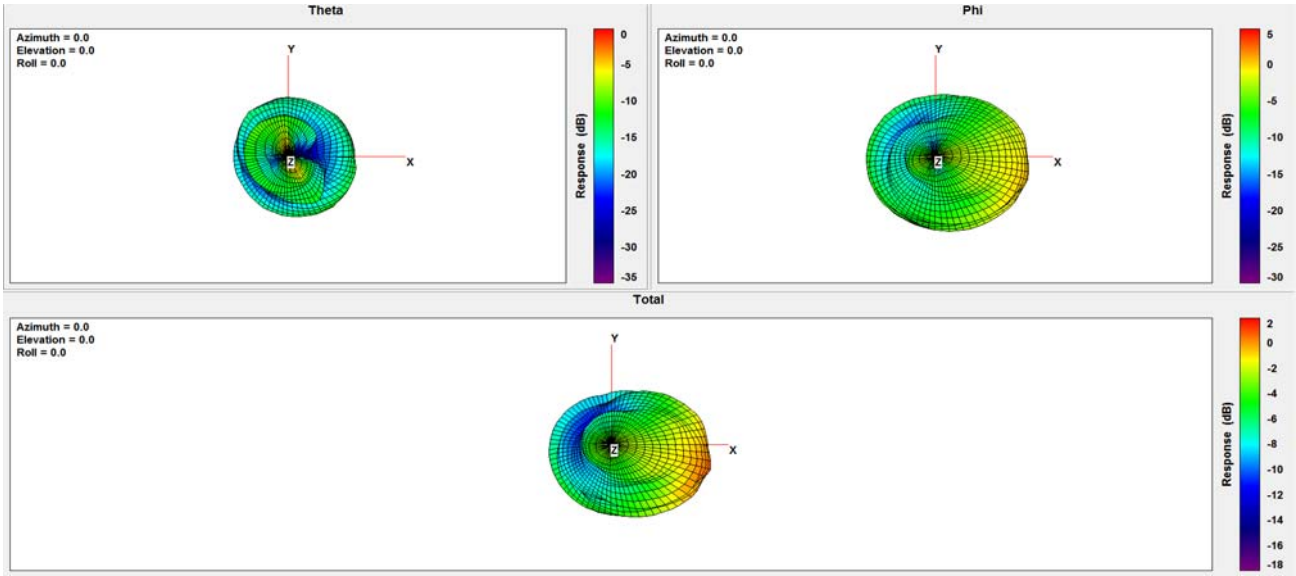

930Mhz:

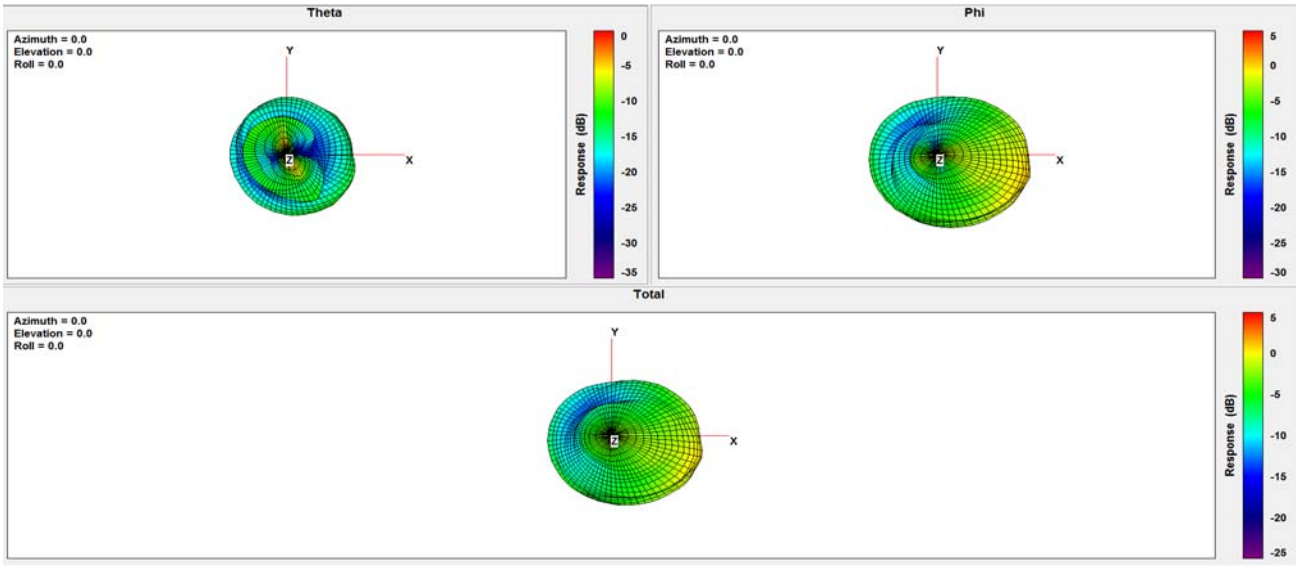

1710Mhz:

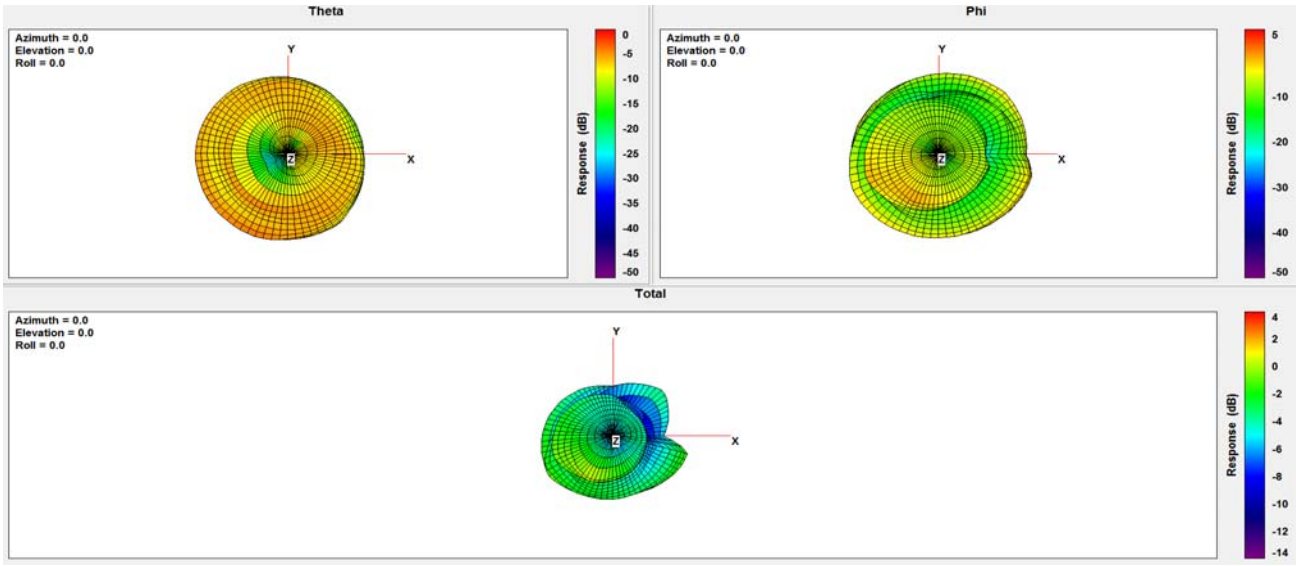

1995Mhz:

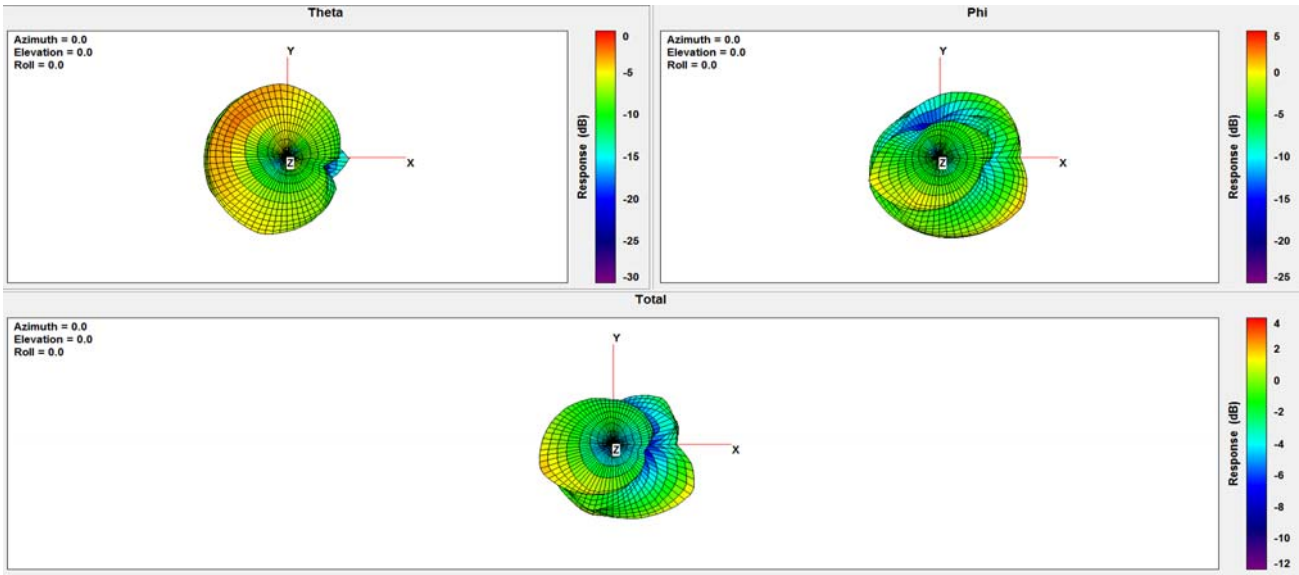

2110Mhz:

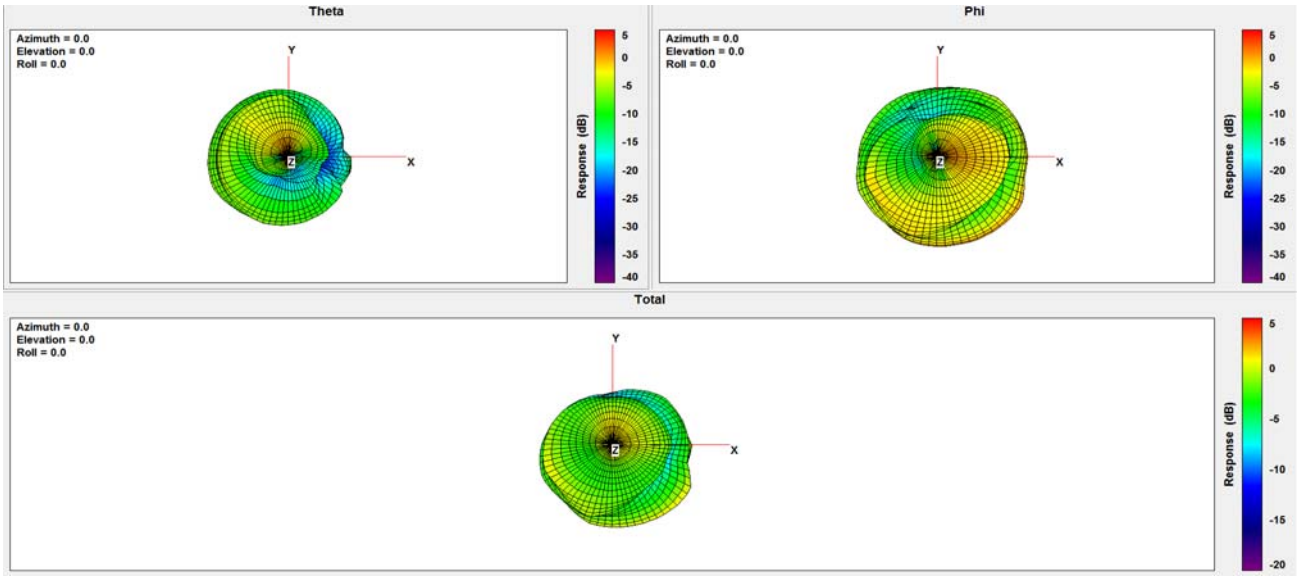

2300Mhz:

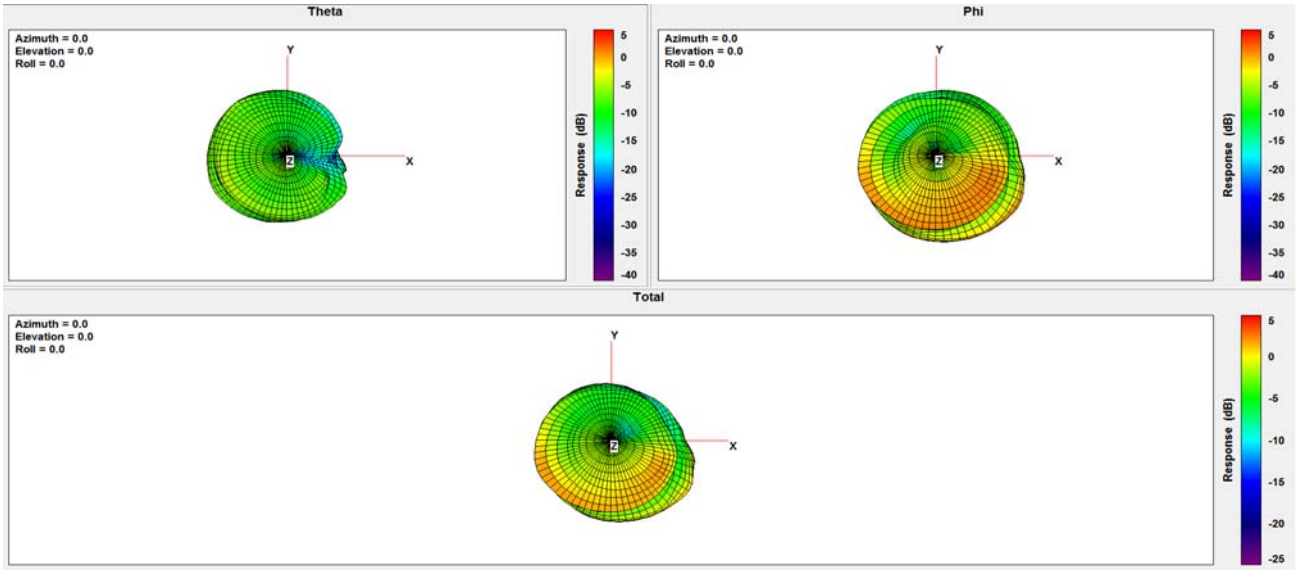

2400Mhz:

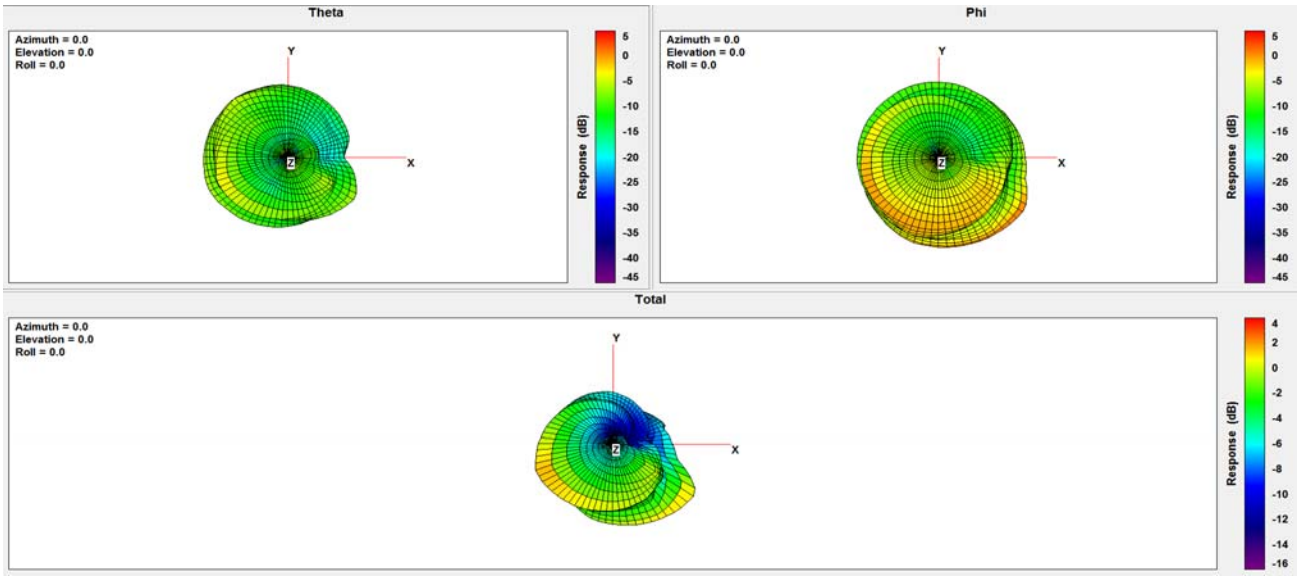

2500Mhz:

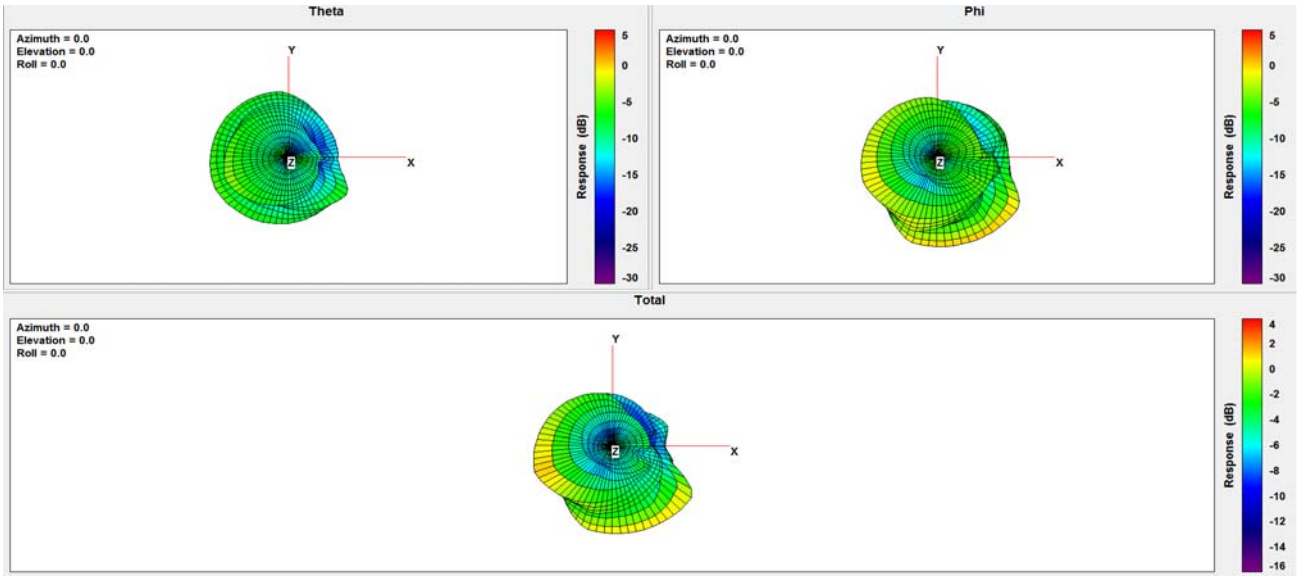
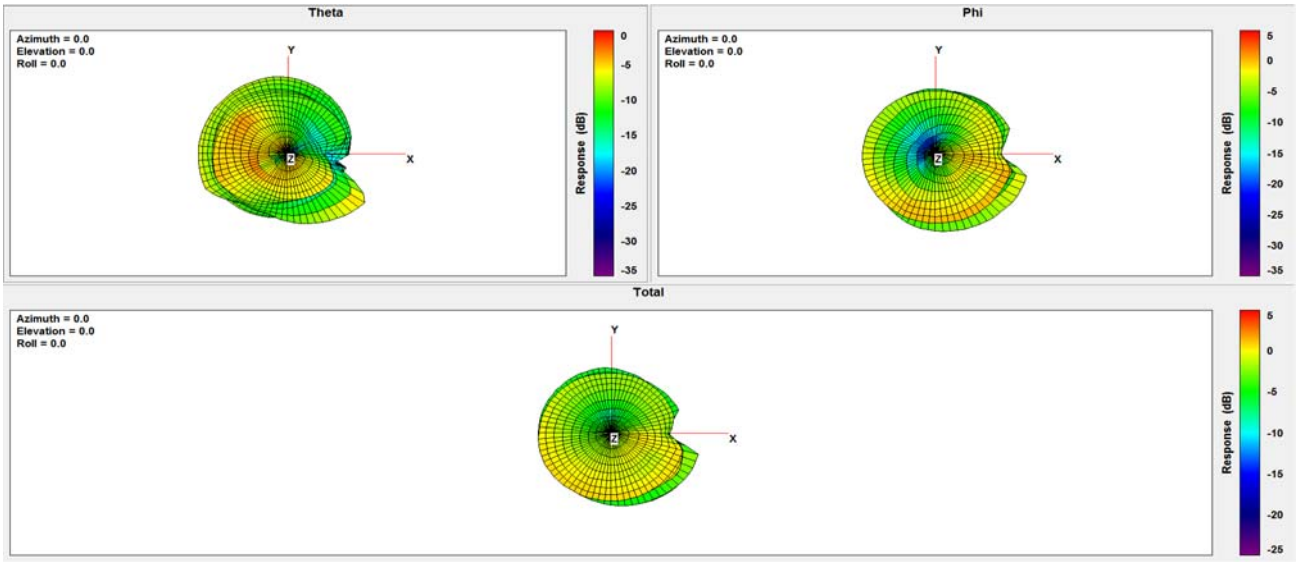
2690Mhz: